東莞永力電業有限公司

YUNG LI CO., LTD

No.32,Dapu Industrial St.,,GangZi,Chang Ping Town,
DongGuan City,GuangDong Province,China 523571

TEL:0769-83396797~8 **FAX:0769-83396796**
E-mail: sales@yung-li.com

Description: YP-12/YC-12

Customer: MAG

Parts No.: CB-N-US-3M

Draw No.: CY-U1334

REVISION RECORD

1		
2		
3		
4		
5		

YUNG LI	
CHECKED	PREPARED BY

CUSTOMER	APPROVED

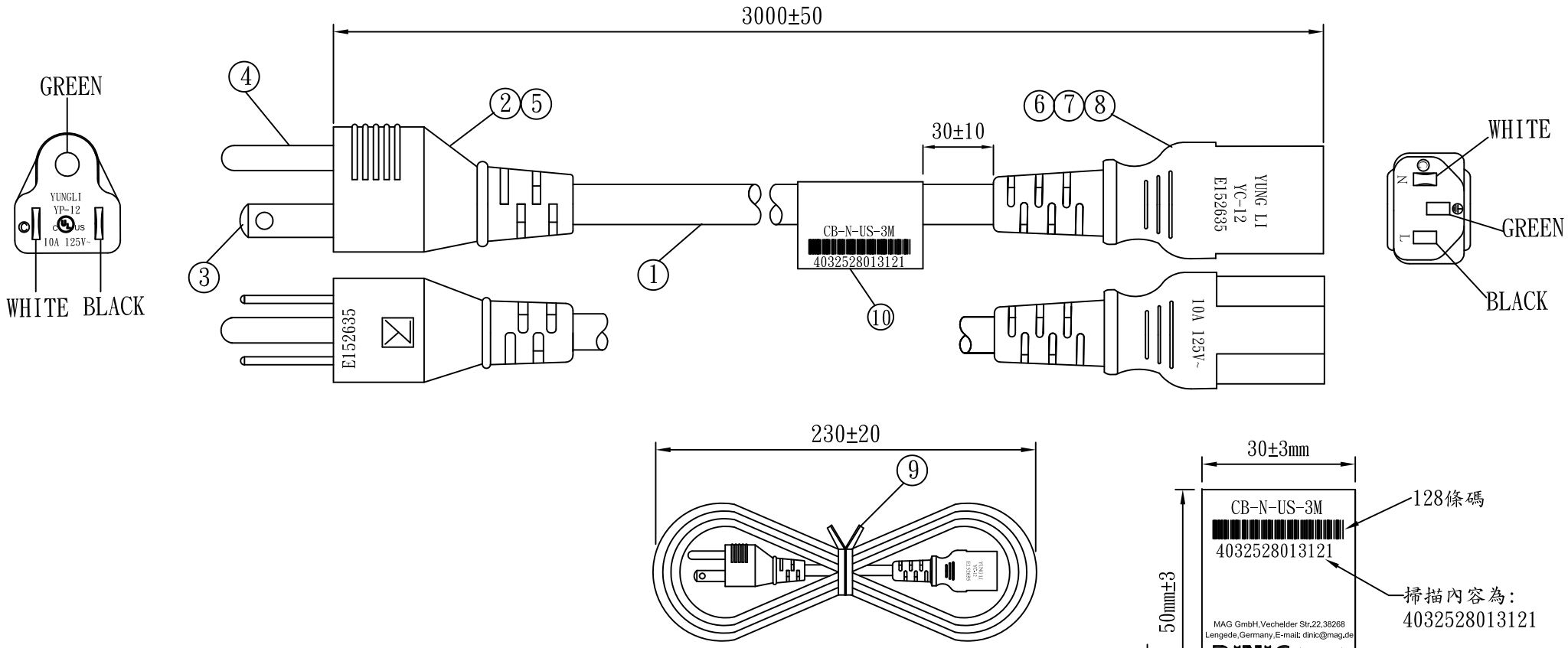

NO.	SPECIFICATION	QTY	REMARK
1	SJT 18/3C 105°C BLACK	1PC	
2	YP-12 PVC PLASTIC 35P BLACK	19g/PC	
3	TERMINAL:98675BS-1	2PCS	
4	∅4.75 TERMINAL:98475	1PC	
5	YP-12 INNER BODY	1PC	
6	YC-12 PVC PLASTIC 50P BLACK	18g/PC	
7	U-TYPE TERMINAL:97740	3PCS	
8	YC-12 INNER BODY	1PC	
9	MINI TIE:L=150mm BLACK	1PC	
10	LABEL:50*30mm 128 CORD	1PC	

TOLERANCE >0±0.30 >1.0±0.50 >10.0±1.0 >20.0±2.0 Angle: ±1°	APPROVED		DATE		YUNG LI CO.,LTD		
	CHECKED		DATE				
	DRAWN	SUKI	DATE	26.09.30	CUSTOMER	MAG	
	TYPE	YP-12/YC-12			P/N	CB-N-US-3M	
	DRAWING NO.	CY-U1334			MATERIAL	P.V.C	UNIT mm
					SCALE		

NEMA 5-15P

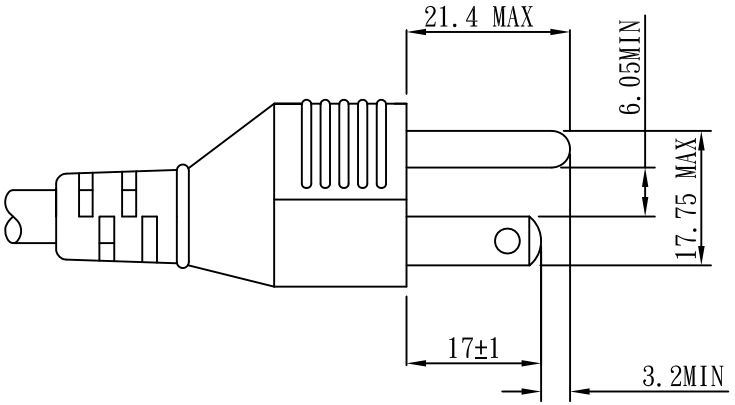

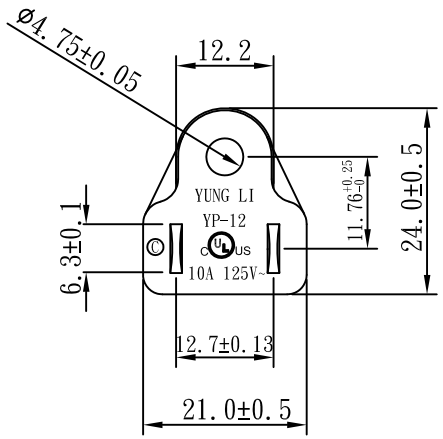

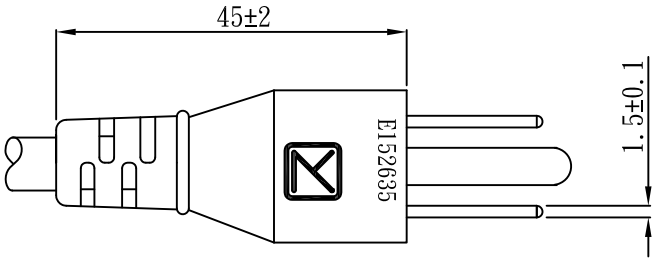

線號	安培數列表	
18AWG	7A 125V~	10A 125V~
16AWG	13A 125V~	
14AWG	15A 125V~	
12AWG	15A 125V~	

TOLERANCE >0±0.30 >1.0±0.50 >10.0±1.0 >20.0±2.0 Angle: ±1°	APPROVED		DATE		YUNG LI CO.,LTD			
	CHECKED		DATE					
	DRAWN		DATE					
	TYPE	YP-12			P/N			
					MATERIAL	TPE	UNIT	mm
	DRAWING NO.	CY-P12U	REV	B	SCALE	1:1		

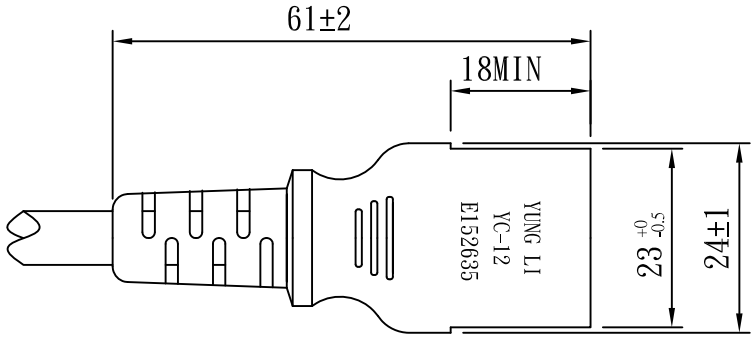

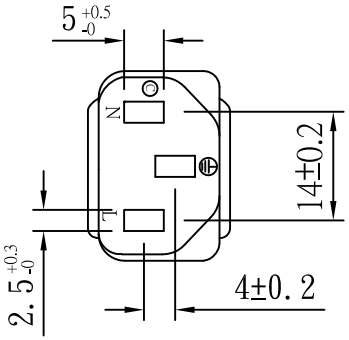

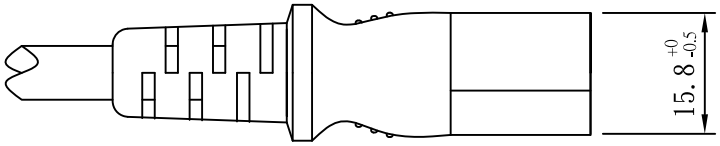

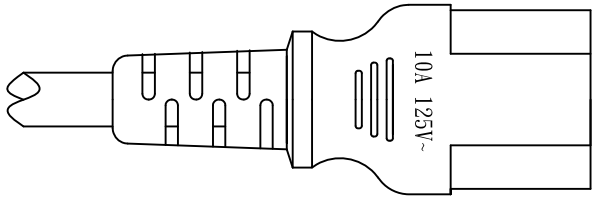

AWG	List of amp.	
12#	15A 125V~	15A 250V~
14#	15A 125V~	15A 250V~
16#	13A 125V~	13A 250V~
18#	7A 125V~ 10A 125V~	 10A 250V~

TOLERANCE >0±0.30 >1.0±0.50 >10.0±1.0 >20.0±2.0 Angle: ±1°	APPROVED		DATE		YUNG LI CO.,LTD			
	CHECKED		DATE					
	DRAWN	Melon	DATE	23.03.22				
	TYPE	YC-12			P/N			
					MATERIAL	P.V.C	UNIT	mm
	DRAWING NO.		REV	B	SCALE	1:1		

YUNG LI CO., LTD
SPECIFICATION

Yung-Li	Style	PVC FLEXIBLE CORDS	Document No
2022.05.25			
Edition	Size	**SJT 18/ 3C 105℃**	Page
A			1/2

1. Standard : UL 62 UL 1581

2. Construction & Dimension

Item		Specification
Conductor	Size	18AWG X 3C
	Material	Annealed Bare Copper
	Construction	41/ § 0.16±0.003
Insulation	Material	PVC
	Minimum Average Thickness	0.76mm
	Minimum Thickness at any point	0.69mm
	Diameter	2.75 ± 0.10
	Identification	Black White Green
Core Assembly	Core Twist	3-Core
	Filler	NA
	Assembly Pair	NA
Taping	Mylar Foil	NA
Shielded	A1-Mylar Foil	NA
Drain Wire	Material	NA
	Construction	NA
Jacket	Material	PVC
	Minimum Average Thickness	0.76mm
	Minimum Thickness at any point	0.61mm
	Overall Diameter(Approx)	7.8 ± 0.2
	Color	Any Color

Marking :

YUNG LI. c(UL)us E241374 SJT 3/C 18AWG(0.824mm^2) 105℃ 300V VW-1

YUNG LI CO., LTD
SPECIFICATION

Yung-Li	Style	PVC FLEXIBLE CORDS	Document No
2022.05.25			
Edition	Size	**SJT 18/ 3C 105℃**	Page
A			2/2

3.Electrical & Physical Properties			
Item			Specification
Rating Voltage			300V
Insulation Resistance			≧0.76MΩ/Km 15.0℃ Min
Dielectric Strength			AC 2.0KV/1 min No Crack
Spark Test			6KV/0.15 Sec
Insulation	Unaged	Tensile Strength	1500 lbs/in^2 min
		Elongation	100%Min
	Aged	Tensile Strength	Min 85%(136±1℃x168hrs)
		Elongation	Min 65%(136±1℃x168hrs)
Jacket	Unaged	Tensile Strength	1500 lbs/in^2 min
		Elongation	100%Min
	Aged	Tensile Strength	Min 85%(136±1℃x168hrs)
		Elongation	Min 45%(136±1℃x168hrs)
Deformation Test			121±1℃m X 1hr ≦ 50%
Cold Bend Test			-20℃ x 4hr No Crack
Heat Shock Test			121±1℃ x 1hr No Crack

Graph:

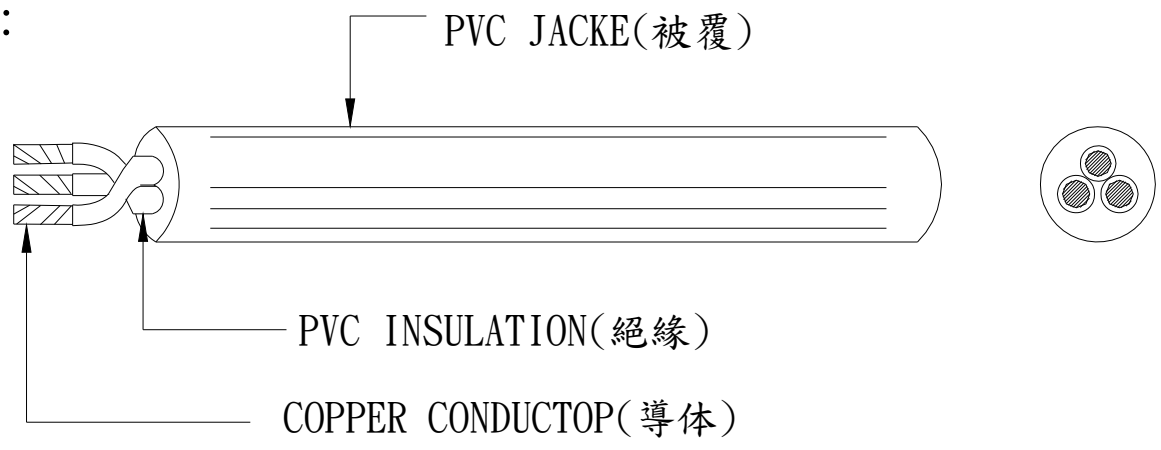

Note: In the process of enhancing our systems, we are transitioning data to a new PiQ data view. This data is being verified with the "Historical" view for accuracy. Once the data is confirmed, the "Historical" view will be discontinued. During this transition, you may encounter duplicate entries or missing/outdated data. For queries during this interim period, please visit our Historical View FAQs or contact our Customer Service.

Cord Sets and Power-supply Cords Certified for Canada

See General Information for Cord Sets and Power-supply Cords Certified for Canada

YUNG LI CO LTD E152635
7F-12 NO 99 SEC 1 XINTAI 5TH RD
XIZHI DISTRICT
NEW TAIPEI, 22175 TAIWAN
Power-supply cords

Cat. No.	ANSI/NEMA WD6 Config	Cord AWG	Cord Type	Electrical Rating Amps V
YP-11	1-15	18/2	SPT-1, SPT-2, SPT-3, NISPT-2, SVT, SVTO, SJT, SJTW, SJTO, SJTOW (All TPE material), SPT-1, SPT-1W, NISPT-1, SPT-2, SPT-2W, NISPT-2, SPT-3, HPN, SVT, SVTO, SJT, SJTW, SJTO, SJTOW, SV, SVO, SJ, SJO, SJOW, SJOOW, EVT, EVJT, EVE, EVJE	7 or 10/125
		17/2	SVT, SVTO (All TPE material), SVT, SVTO, SV, SVO, SJ, SJO, SJOW, SJOOW, EVT, EVJT, EVE, EVJE	12/125
		16/2	SPT-2, SPT-3, NISPT-2, SVT, SVTO, SJT, SJTW, SJTO, SJTOW (All TPE material), SPT-2, SPT-2W, NISPT-2, SPT-3, SVT, SVTO, SJT, SJTW, SJTO, SJTOW, SV, SVO, SJ, SJO, SJOW, SJOOW, EVT, EVJT, EVE, EVJE	13/125
		16/2	HPN	15/125
		14/2	SPT-3, SJT, SJTW, SJTO, SJTOW (All TPE material), SPT-3, SJT, SJTW, SJTO, SJTOW, SJ, SJO, SJOW, SJOOW, EVT, EVJT, EVE, EVJE	15/125
YP-11W	1-15P	18/2	SPT-1, SPT-2, SPT-3, NISPT-2, SVT, SVTO, SJT, SJTW, SJTO, SJTOW (All TPE material), SPT-1, SPT-1W, NISPT-1, SPT-2, SPT-2W, NISPT-2, SPT-3, HPN, SVT, SVTO, SJT, SJTW, , SJTO, SJTOW, SV, SVO, SJ, SJO, SJOW, SJOOW, EVT, EVJT, EVE, EVJE	7 or 10/125
		17/2	SVT, SVTO (All TPE material), SVT, SVTO, SV, SVO, SJ, SJO, SJOW, SJOOW, EVT, EVJT, EVE, EVJE	12/125
		16/2	SPT-2, SPT-3, NISPT-2, SVT, SVTO, SJT, SJTW, SJTO, SJTOW (All TPE material), SPT-2, SPT-2W, NISPT-2, SPT-3,SVT, SVTO, SJT, SJTW, SJTO, SJTOW, SV, SVO, SJ, SJO, SJOW, SJOOW, EVT, EVJT, EVE, EVJE	13/125
		16/2	HPN	15/125

		14/2	SPT-3, SJT, SJTW, SJTO, SJTOW (All TPE material), SPT-3, SJT, SJTW, SJTO, SJTOW, SJ, SJO, SJOW, SJOOW, EVT, EVJT, EVE, EVJE	15/125
YP-11C	1-15	18/2	NISPT-2 (TPE), NISPT-1, NISPT-2, EVT, EVJT, EVE, EVJE	7 or 10/125
YP-12	5-15	18/3	SVT, SJT, SJTW, SJTO, SJTOW, ST, STW, STOW (Shielded and Non-shielded for all types), SVTO, SPT-2, SPT-3 (All TPE material), SVT, SVT Shielded, SVTO, SJT, SJT Shielded, SJTW, SJTW Shielded, SJTO, SJTO Shielded, SJTOW, SJTOW Shielded, SJTOOW, ST, ST Shielded, STW, STW Shielded, STOW, STOW Shielded, SV, SVO, SJ, SJ Shielded, SJO, SJO Shielded, SJOO, SJOO Shielded, SJOW, SJOW Shielded, SJOOW, SJOOW Shielded, S, SO, SO Shielded, SOO, SOO Shielded, SOW, SOW Shielded, SOOW, SOOW Shielded, SPT-2, SPT-3, EVT, EVJT, EVE, EVJE	7 or 10/125
		17/3	SVT, SVTO (All TPE material), SVT, SVTO, SV, SVO, EVT, EVJT, EVE, EVJE	12/125
		16/3	SVT, SJT, SJTW, SJTO, SJTOW, ST, STW, STOW (Shielded and Non-shielded for all types), SVTO, SPT-2, SPT-3 (All TPE material), SVT, SVT Shielded, SVTO, SJT, SJT Shielded, SJTW, SJTW Shielded, SJTO, SJTO Shielded, SJTOW, SJTOW Shielded, SJTOOW, ST, ST Shielded, STW, STW Shielded, STOW, STOW Shielded, SV, SVO, SJ, SJ Shielded, SJO, SJO Shielded, SJOO, SJOO Shielded, SJOW, SJOW Shielded, SJOOW, SJOOW Shielded, S, SO, SO Shielded, SOO, SOO Shielded, SOW, SOW Shielded, SOOW, SOOW Shielded, SPT-2, SPT-3, EVT, EVJT, EVE, EVJE	13/125
		14/3	SJT, SJTW, SJTO, SJTOW, ST, STW, STOW (Shielded and Non-shielded for all types), SPT-3 (All TPE material), SJT, SJT Shielded, SJTW, SJTW Shielded, SJTO, SJTO Shielded, SJTOW, SJTOW Shielded, SJTOOW, ST, ST Shielded, STW, STW Shielded, STOW, STOW Shielded, SJ, SJ Shielded, SJO, SJO Shielded, SJOO, SJOO Shielded, SJOW, SJOW Shielded, SJOOW, SJOOW Shielded, S, SO, SO Shielded, SOO, SOO Shielded, SOW, SOW Shielded, SOOW, SOOW Shielded, SPT-3, EVT, EVJT, EVE, EVJE, SJT-B	15/125
		12/3	SJT, SJTW, SJTO, SJTOW, ST, STW, STOW (Shielded and Non-shielded for all types), SPT-3 (All TPE material), SJT, SJT Shielded, SJTW, SJTW Shielded, SJTO, SJTO Shielded, SJTOW, SJTOW Shielded, SJTOOW, ST, ST Shielded, STW, STW Shielded, STOW, STOW Shielded, SJ, SJ Shielded, SJO, SJO Shielded, SJOO, SJOO Shielded, SJOW, SJOW Shielded, SJOOW, SJOOW Shielded, S, SO, SO Shielded, SOO, SOO Shielded, SOW, SOW Shielded, SOOW, SOOW Shielded, SPT-3, EVT, EVJT, EVE, EVJE	15/125
YP-12L	5-15	18/3	SVT, SVT shielded, SJT, SJTW, SJTO, SJTOW, ST, STW, STOW, SPT-2, SPT-3 (All TPE material), SVT, SVT shielded, SJT, SJTW, SJTO, SJTOW, ST, STW, STOW, SO, SOW, SOOW, SPT-2, SPT-3, EVT, EVJT, EVE, EVJE	7 or 10/125

YP-109	L7-30P	14/3	SJ, SJO, SJOW, SJOO, SJOOW, S, SO, SOW, SOO, SOOW, SJT, SJTW, SJTO, SJTOW, SJTOO, SJTOOW, ST, STW, STO, STOW, STOO, STOOW	18/277 Vac
		12/3	SJ, SJO, SJOW, SJOO, SJOOW, S, SO, SOW, SOO, SOOW, SJT, SJTW, SJTO, SJTOW, SJTOO, SJTOOW, ST, STW, STO, STOW, STOO, STOOW	25/277 Vac
		10/3	SJ, SJO, SJOW, SJOO, SJOOW, S, SO, SOW, SOO, SOOW, SJT, SJTW, SJTO, SJTOW, SJTOO, SJTOOW, ST, STW, STO, STOW, STOO, STOOW	30/277 Vac
		8/3	S, SO, SOW, SOO, SOOW, ST, STW, STO, STOW, STOO, STOOW	30/277 Vac
YP-12R, YP-12R-1	5-15P	18/3	SJ, SJO, SJOW, SJOO, SJOOW, S, SO, SOW, SOO, SOOW, SVT, SVTO, SJT, SJTW, SJTO, SJTOW, SJTOO, SJTOOW, ST, STW, STO, STOW, STOO, STOOW	10/125
		16/3	SJ, SJO, SJOW, SJOO, SJOOW, S, SO, SOW, SOO, SOOW, SJT, SJTW, SJTO, SJTOW, SJTOO, SJTOOW, ST, STW, STO, STOW, STOO, STOOW	13/125
		14/3	SJ, SJO, SJOW, SJOO, SJOOW, S, SO, SOW, SOO, SOOW, SJT, SJTW, SJTO, SJTOW, SJTOO, SJTOOW, ST, STW, STO, STOW, STOO, STOOW	15/125
		12/3	SJ, SJO, SJOW, SJOO, SJOOW, SJT, SJTW, SJTO, SJTOW, SJTOO, SJTOOW	15/125

Special-use cord sets

Cat. No.	IEC 320 Config	Cord AWG	Cord Type	Electrical Rating Amps V
YC-11	IEC C17	18	SPT-1, SPT-2, SPT-3, NISPT-2, SVT, SJT, SJTO, SJTOW, ST, STW, STOW (All TPE material), SPT-1, SPT-2, NISPT-1, NISPT-2, SPT-3, SVT, SJT, SJTO, SJTW, SJTOW, ST, STW, STOW, SO, SOW, SOOW	2.5, 7 or 10/125 or 250
		17	SPT-3, SVT, SJT, SJTW, SJTO, SJTOW, ST, STW, STOW (All TPE material), SPT-3, SVT, SJT, SJTW, SJTO, SJTOW, ST, STW, STOW, SO, SOW, SOOW	10, 12/125 or 250
		16	SPT-2, SPT-3, NISPT-2, SVT, SJT, SJTW, SJTO, SJTOW, ST, STW, STOW (All TPE material), SPT-2, NISPT-2, SPT-3, SVT, SJT, SJTW, SJTO, SJTOW, ST, STW, STOW, SO, SOW, SOOW	13/125 or 250
YC-12, YC-12L, YC-12L-1, YC-12L-2, YC-12L-3	IEC C13	18	SVT, SJT, SJTW, SJTO, SJTOW, ST, STW, STOW (Shielded and Non-shielded for all types), SPT-2, SPT-3 (All TPE material), SVT, SJT, SJTW, SJTO, SJTOW, SJ, SJO, SJOO, SJOW, SJOOW, ST, STW, STOW, SO, SOO, SOW, SOOW (Shielded or Non-Shielded for above types), SPT-2, SPT-3	2.5, 7 or 10/125 or 250
		17	SVT, SJT, SJTW, SJTO, SJTOW, ST, STW, STOW (Shielded and Non-shielded for all types), SPT-3 (All TPE material), SVT, SJT, SJTW, SJTO, SJTOW, ST, STW, STOW, SJ, SJO, SJOO, SJOW, SJOOW, SO, SOO, SOW, SOOW (Shielded or Non-shielded for above types), SPT-3	10, 12/125 or 250

		16	SJT, SJTW, SJTO, SJTOW, ST, STW, STOW (Shielded and Non-shielded for all types), SPT-3 (All TPE material), SJT, SJTW, SJTO, SJTOW, ST, STW, STOW, SJ, SJO, SJOO, SJOW, SJOOW, SO, SOO, SOW, SOOW (Shielded or Non-shielded for above types), SPT-2, SPT-3	13/125 or 250
		15	SJT, SJTW, SJTO, SJTOW, ST, STW, STOW (Shielded and Non-shielded for all types), SPT-3 (All TPE material), SJT, SJTW, SJTO, SJTOW, ST, STW, STOW, SJ, SJO, SJOO, SJOW, SJOOW, SO, SOO, SOW, SOOW (Shielded or Non-shielded for above types), SPT-3	10, 14/125 or 250
		14	SJT, SJTW, SJTO, SJTOW, ST, STW, STOW (Shielded and Non-shielded for all types), SPT-3 (All TPE material), SJT, SJTW, SJTO, SJTOW, ST, STW, STOW, SJ, SJO, SJOO, SJOW, SJOOW, SO, SOO, SOW, SOOW (Shielded or Non-shielded for above types), SPT-3	15/125 or 250
		12	SJT, SJTW, SJTO, SJTOW, ST, STW, STOW (All TPE material, Shielded and Non-shielded for all types), SJT, SJTW, SJTO, SJTOW, ST, STW, STOW, SJ, SJO, SJOO, SJOW, SJOOW, SO, SOO, SOW, SOOW (Shielded or Non-shielded for all types)	15/125 or 250
YC-12(A.C.1)	IEC C13	12	SJT, SJTW, SJTO, SJTOW, ST, STW, STOW, SPT-3 (All TPE material), SJT, SJTW, SJTO, SJTOW, ST, STW, STOW, SO, SOW, SOOW, SPT-3	15/125 or 250
		10	SJT, SJTW, SJTO, SJTOW, ST, STW, STOW (All TPE material), SJT, SJTW, SJTO, SJTOW, ST, STW, STOW, SO, SOW, SOOW	15/125 or 250
YC-12C	IEC C13	18	NISPT-2 (TPE), NISPT-2	2.5, 7 or 10/125 or 250
		16	NISPT-2 (TPE), NISPT-2	13/125 or 250
YC-13	IEC C7	18	SPT-1, SPT-2, NISPT-2, SVT, SJT (All TPE material), SPT-1, SPT-1W, SPT-2, SPT-2W, NISPT-1, NISPT-2, SVT, SJT	2.5/250 or 7/125
YC-13W	IEC C7P	18	SPT-1, SPT-2, NISPT-2, SVT, SJT (All TPE material), SPT-1, SPT-1W, SPT-2, SPT-2W, NISPT-1, NISPT-2, SVT, SJT	2.5/250 or 7/125
YC-14	IEC C5	18	SPT-2, SVT, SVT shielded, SVTO, SJT, SJT shielded, SJTW, SJTW shielded, SJTO, SJTOW (All TPE material), SVT, SVT Shielded, SVTO, SJT, SJT Shielded, SJTW, SJTW Shielded, SJTO, SJTOW, SV, SVO, SJ, SJO, SJOW, SJOOW	2.5/250 or 7/125
			SPT-2	
YC-13L	IEC C7	18	SPT-1, SPT-2, NISPT-2, SVT, SJT (All TPE material), SPT-1, SPT-1W, SPT-2, SPT-2W, NISPT-1, NISPT-2, SVT, SJT	2.5/250 or 7/125
YC-13D	IEC C7	18	SPT-1, SPT-2, NISPT-2, SVT, SJT (All TPE material), SPT-1, SPT-1W, SPT-2, SPT-2W, NISPT-1, NISPT-2, SJT, SVT	2.5/250 or 7/125
YC-13C	IEC C7	18	NISPT-2 (All TPE material), NISPT-1, NISPT-2	2.5/250 or 7/125
YC-13E	IEC C7	18	SPT-1, SPT-2, NISPT-2, SVT, SJT (All TPE material), SPT-1, SPT-1W, SPT-2, SPT-2W, NISPT-1, NISPT-2, SVT, SJT	2.5/250 or 7/125
YC-14L, YC-14L-1, YC-14L-2, YC-14L-3	IEC C5	18	SVT, SJT, SPT-2 (All TPE material), SVT, SJT, SPT-2	2.5/250 or 7/125

Flexible Cord Certified for Canada

COMPANY
Yung Li Co Ltd
7F-12 No 99 Sec 1 Xintai 5th Rd
Xizhi District
New Taipei, 221416 Taiwan

E241374

Type(s): *DRT* , *NISPE-1* , *NISPE-2* , *NISPT-1* , *NISPT-2* , *S* , *SE* , *SJ* , *SJE* , *SJO* , *SJOO* , *SJOOW* , *SJOW* , *SJT* , *SJT-B* , *SJTO* , *SJTOO* , *SJTOOW* , *SJTOW* , *SJTW* , *SO* , *SOO* , *SOOW* , *SOW* , *SPE-1* , *SPE-2* , *SPE-3* , *SPT-1* , *SPT-2* , *SPT-3* , *ST* , *ST-B* , *STO* , *STOO* , *STOOW* , *STOW* , *STW* , *SVE* , *SVT* , *SVT-B* , *SVTO*

Last Updated on 2026-05-20

UL Solutions permits the reproduction of the material contained in Product iQ subject to the following conditions: 1. The Guide Information, Assemblies, Constructions, Designs, Systems, and/or Certifications (files) must be presented in their entirety and in a non-misleading manner, without any manipulation of the data (or drawings). 2. The statement "Reprinted from Product iQ with permission from UL Solutions" must appear adjacent to the extracted material. In addition, the reprinted material must include a copyright notice in the following format: "©2026 UL LLC."