東莞永力電業有限公司

YUNG LI CO., LTD

Da Pu Industrial Zone, Gang Zi, Changping Town,

Dong Guan City, Guangdong 523571 China.P.R.C

TEL:0769-83396797~8 **FAX:0769-83396796**

E-mail: sales@yung-li.com

Description: YP-03/YC-12

Customer: MAG

Parts No.: CB-N-CH-5M

Draw No.:

REVISION RECORD

1		
2		
3		
4		
5		

YUNG LI	
CHECKED	PREPARED BY

CUSTOMER	APPROVED

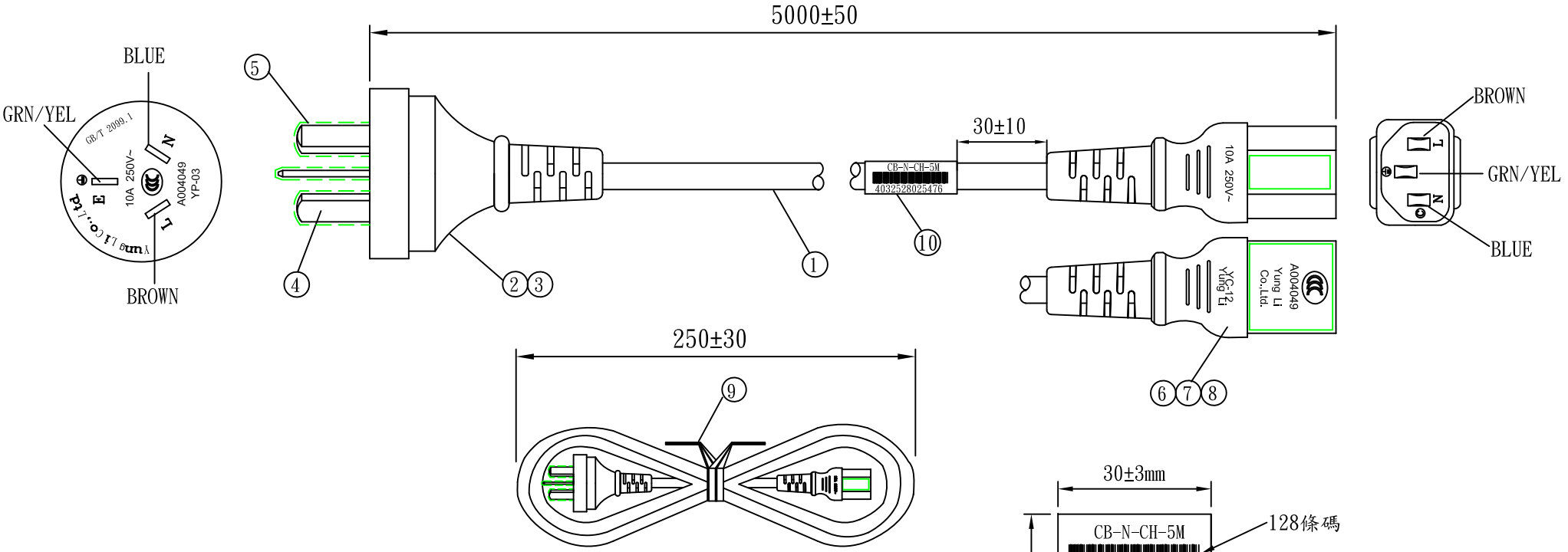

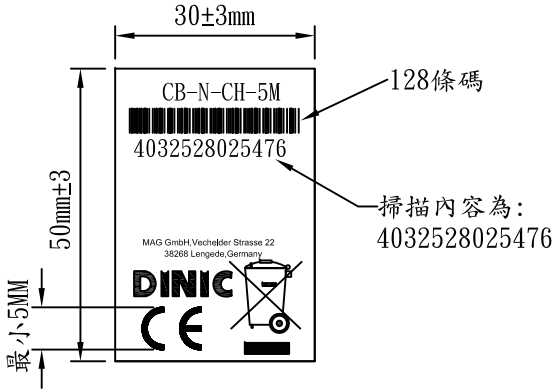

NO.	SPECIFICATION	QTY	REMARK
1	H05VV-F 1.5/3C RVV BLACK	1PC	
2	YP-03 PVC PLASTIC:50P BLACK	32g/PC	
3	YP-03 INNER BODY	1PC	
4	TER:98655LBS-1	3PCS	
5	SLEEVE:3PIN	1PC	
6	YC-12 PVC PLASTIC:50P BLACK	18g/PC	
7	YC-12 INNER BODY	1PC	
8	"U"TER:97740BS-0	3PCS	
9	MINI TIE BLACK	1PC	
10	LABEL:30X50mm 128Code	1PC	Label-6771

Tolerance >0±0.30 >1.0±0.50 >10.0±1.0 >20.0±2.0 Angle: ±1°	Approved		Date		**YUNG LI CO.,LTD**		
	Checked		Date				
	Drawn	SUKI	Date	23.01.05	Customer	MAG	
	Cat.No.	YP-03/YC-12			P/N.	CB-N-CH-5M	
	Drawing No.	CY-C0127	Rev.	B	Material	P.V.C	Unit mm
					Scale		

GB 1002
GB 2099

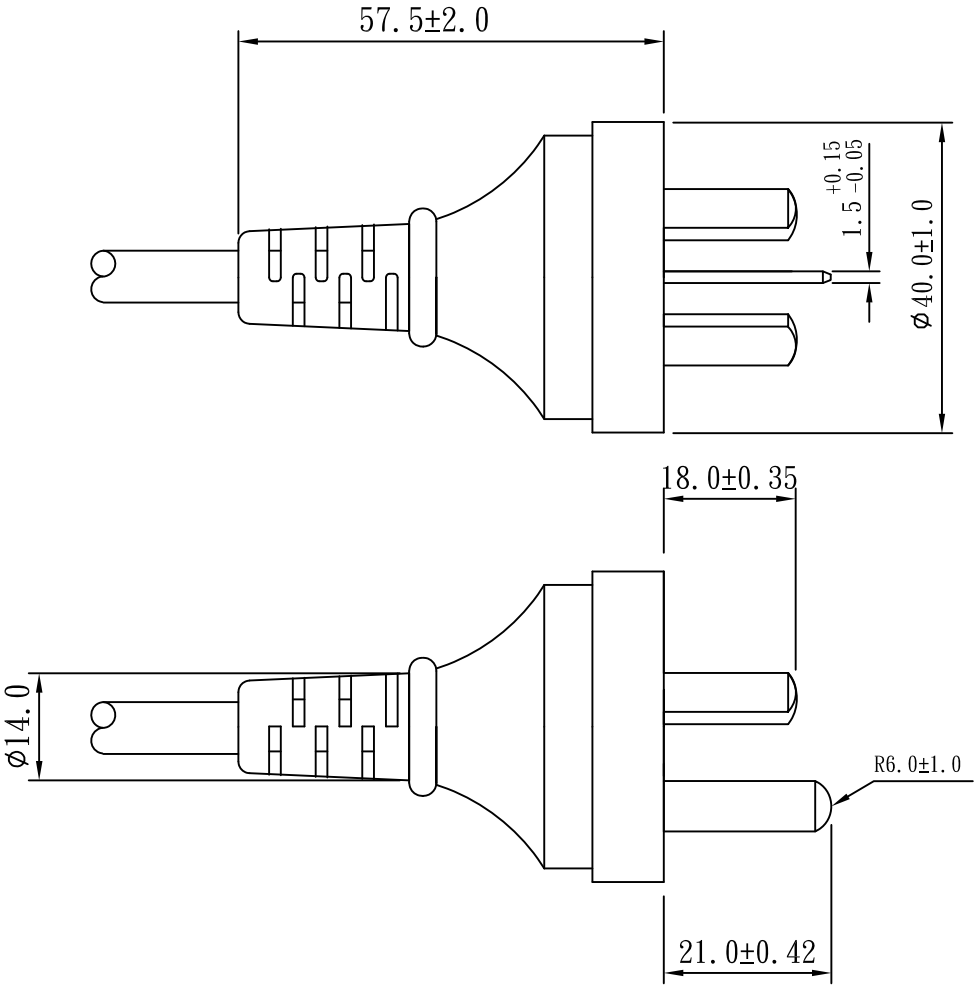

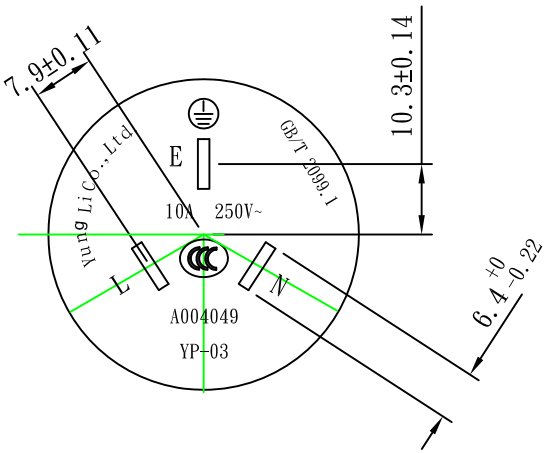

TOLERANCE >0±0.30 >1.0±0.50 >10.0±1.0 >20.0±2.0 Angle: ±1°	APPROVED		DATE		YUNG LI CO., LTD.
	CHECKED		DATE		
	DRAWN	haiyan	DATE	22.10.18	
	TYPE	YP-03			P/N
					MATERIAL P.V.C UNIT mm
	DRAWING NO	MP-C03000			SCALE 1:1

IEC 60320 C13

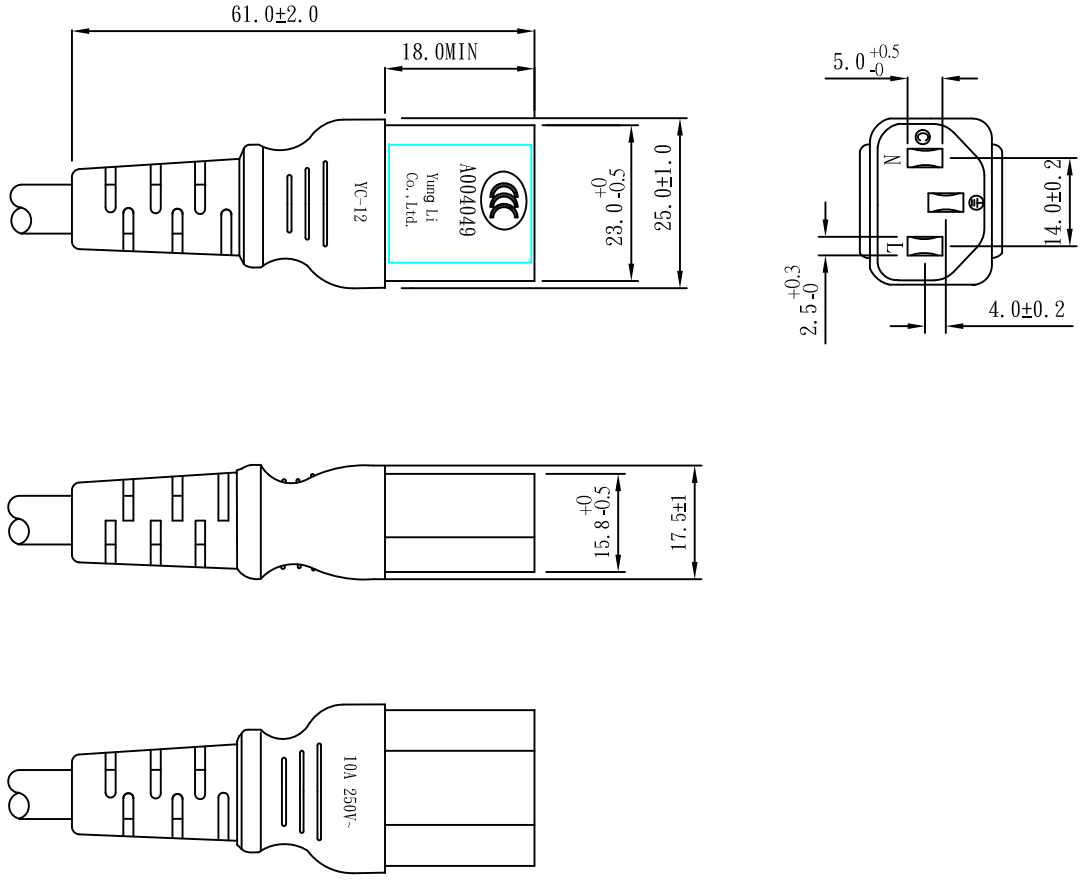

TOLERANCE >0±0.30 >1.0±0.50 >10.0±1.0 >20.0±2.0 Angle: ±1°	APPROVED		DATE		YUNG LI CO.,LTD
	CHECKED		DATE		
	DRAWN		DATE		
	TYPE	YC-12(CCC)			P/N
					MATERIAL P.V.C UNIT mm
	DRAWING NO.	D-C12BC	REV	B	SCALE 1:1

YUNG LI CO., LTD
SPECIFICATION

Yung Li	Style	PVC FLEXIBLE CORDS	Document No
2019.4.17			
Edition	Size	**H05VV-F 3G 1.5mm^2**	Page
A			1/2

1. Standard: IEC 60227 IEC60228
2. Construction & Dimension

Item		Specification
Conductor	Size	3G 1.5mm^2
	Material	Annealed Bare Copper
	Construction	48/ϕ 0.202±0.008
Insulation	Material	PVC
	Minimum Average Thickness	0.70mm
	Minimum Thickness at any point	0.53mm
	Diameter	3.05± 0.10
	Identification	Blue,Brown,Green/Yellow
Core Assembly	Core Twist	3-Core
	Filler	NA
	Assembly Pair	NA
Taping	Mylar Foil	NA
Shielded	A1-Mylar Foil	NA
Drain	Material	NA
	Construction	NA
Jacket	Material	NA
	Minimum Average Thickness	0.9mm
	Minimum Thickness at any point	0.67mm
	Overall Diameter(Approx)	8.5± 0.2
	Color	Any colour

Marking:

☒ Yung Li Co., Ltd. H05VV-F 3G 1.5mm^2 ◁VDE▷ NF-USE 1347 NF KEMA-KEUR △CEBEC ◁ÖVE▷

Ⓓ FI Ⓝ Ⓢ IEMMEQU SAA-190646-EA CCC A004049 60227 IEC 53(RVV) 300/500V SU01027-4002

YUNG LI CO., LTD
SPECIFICATION

Yung Li	Style	PVC FLEXIBLE CORDS	Document No
2019.4.17			
Edition	Size	**H05VV-F 3G 1.5mm^2**	Page
A			2/2

4.Electrical & Physical Properties			
Item			Specification
Rating Voltage			300/500V
Maximum Temperature Rating			70℃
Conductor resistance(AT 20℃)			13.3Ω/Km Max
Insulation Resistance(AT 70℃)			0.010MΩ/Km Min
Dielectric Strength			AC 2.0 KV / 15MIN No Brcak
Spark Test			5KV
Insulation	Unaged	Tensile Strength	1.02 kgf/mm^2 min
		Elongation	150% Min
	Aged	Tensile Strength	80~120% (80℃x168hrs)
		Elongation	80~120% (80℃x168hrs)
	Loss of mass Test		2.0mg/cm^2 (max)
Jacket	Unaged	Tensile Strength	1.02 kgf/mm^2 min
		Elongation	150% Min
	Aged	Tensile Strength	80~120% (80℃x168hrs)
		Elongation	80~120% (80℃x168hrs)
	Loss of mass Test		2.0mg/cm^2 (max)
Deformation Test			70±4℃ X 1hr ≦ 50%
Cold Bend Test			-15℃ x 4hr No Crack
Heat Shock Test			150±2℃ x 1hr No Crack

Graph:

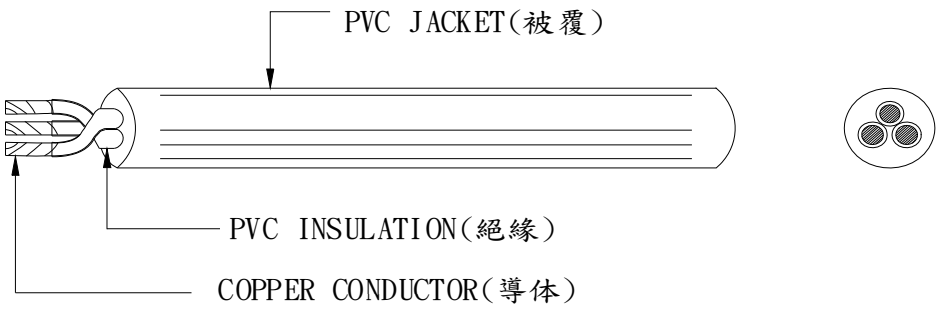

CERTIFICATE FOR CHINA COMPULSORY PRODUCT CERTIFICATION

CERTIFICATE NO.: 2007010101249051

NAME AND ADDRESS OF THE APPLICANT

Yung Li Co.,Ltd.

Dapu Industrial Zone, Gangzi, Changping Town, Dongguan

NAME AND ADDRESS OF THE MANUFACTURER

Yung Li Co.,Ltd.

Dapu Industrial Zone, Gangzi, Changping Town, Dongguan

NAME AND ADDRESS OF THE FACTORY

Yung Li Co.,Ltd.

Dapu Industrial Zone, Gangzi, Changping Town, Dongguan

PRODUCT NAME, MODEL AND SPECIFICATION

Cord Set

YP-03+YC-12、YP-03 + YC-12L、YP-03L + YC-12、YP-03L + YC-12L 10A 250V～(配 60227IEC53 3×0.75mm2、60227IEC53 3×1mm2)，YP-03 + YC-12L-1、YP-03 + YC-12L-2、YP-03 + YC-12L-3、YP-03L + YC-12L-1、YP-03L + YC-12L-2、YP-03L + YC-12L-3 10A 250V ～（配 60227IEC53 3×0.75mm2、60227IEC53 3×1mm2、60227IEC53 3×1.5mm2）

THE STANDARDS AND TECHNICAL REQUIREMENTS FOR THE PRODUCTS

GB/T15934-2008

This is to certify that the above mentioned product(s) complies with the requirements of implementation rules for compulsory certification(REFNO.CNCA-C02-01:2014).

Valid from: Oct.10,2018 **Valid until:** Oct.10,2023

The validity of the certificate is subject to positive result of the regular follow up inspection by issuing certification body until the expiry date.

Date of original issued: Sep.27,2007

The certificate information is available through CNCA's website: www.cnca.gov.cn

President:

Wang Kejiao

CHINA QUALITY CERTIFICATION CENTRE 中国质量认证中心

CHINA QUALITY CERTIFICATION CENTRE

http://www.cqc.com.cn Section 9, No. 188, Nansihuan Xilu, Beijing 100070 P. R. China Tel: +86 10 83886666

Q 2081831

CERTIFICATE FOR CHINA COMPULSORY PRODUCT CERTIFICATION

CERTIFICATE NO.: 2004010105138414

NAME AND ADDRESS OF THE APPLICANT

Yung Li Co.,Ltd.

Dapu Industrial Zone,Gangzi,Changping Town,Dongguan

NAME AND ADDRESS OF THE MANUFACTURER

Yung Li Co.,Ltd.

Dapu Industrial Zone,Gangzi,Changping Town,Dongguan

NAME AND ADDRESS OF THE FACTORY

Yung Li Co.,Ltd.

Dapu Industrial Zone,Gangzi,Changping Town,Dongguan

PRODUCT NAME, MODEL AND SPECIFICATION

PVC insulated flexible cables and wires

60227 IEC 52(RVV) 300/300V 0.5-0.75(2-3 芯); 60227 IEC 53(RVV) 300/500V 0.75-2.5(2-5 芯);

THE STANDARDS AND TECHNICAL REQUIREMENTS FOR THE PRODUCTS

GB/T 5023.5-2008/IEC60227-5:2003

This is to certify that the above mentioned product(s) complies with the requirements of implementation rules for compulsory certification(REFNO.CNCA-C01-01:2014).

Valid from: Nov.20,2020 **Valid until:** Nov.20,2025

The validity of the certificate is subject to positive result of the regular follow up inspection by issuing certification body until the expiry date.

Date of original issued: Jan.04,2005

The certificate information is available through CNCA's website: www.cnca.gov.cn

Accredited by China National Accreditation Service for Conformity Assessment CNAS C001-P

President: 陆梅

Lu Mei

CHINA QUALITY CERTIFICATION CENTRE 中国质量认证中心

CHINA QUALITY CERTIFICATION CENTRE

http://www.cqc.com.cn Section 9, No. 188, Nansihuan Xilu, Beijing 100070 P. R. China Tel: +86 10 83886666

Q 2529714